Self-aligning ball bearing 1206-K-TV-C3 NKE

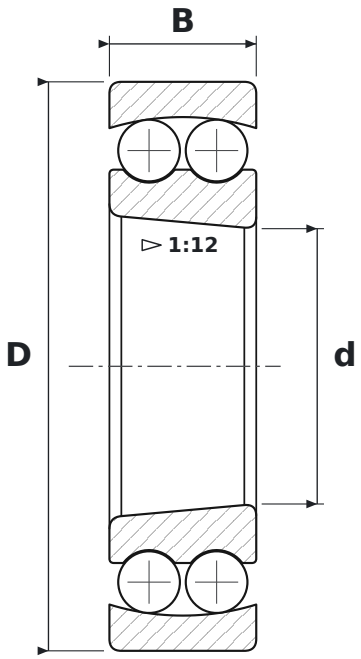

DIMENSIONS

d	bore diameter	**30 mm**
D	outside diameter	**62 mm**
B	width	**16 mm**

WHAT 1206-K-TV-C3 MEANS

K	tapered bore, taper 1:12
TV	glass-fibre reinforced polyamide cage (FAG)
C3	radial clearance greater than normal

SPECIFICATIONS

Manufacturer	**NKE**
Manufacturer designation	**1206-K-TV-C3**
Rolling elements	**double-row ball bearing**