Self-aligning ball bearing 1207 K.S NTN

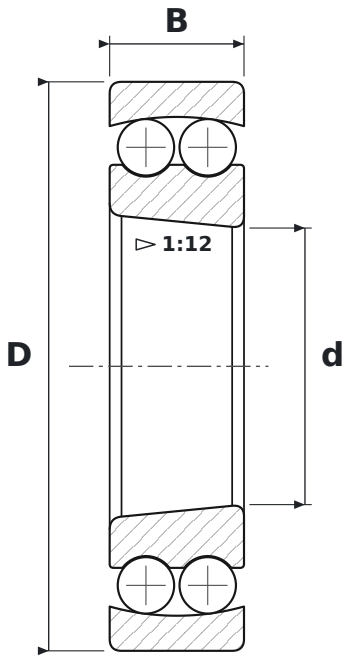

DIMENSIONS

d	bore diameter	**35 mm**
D	outside diameter	**72 mm**
B	width	**17 mm**

WHAT 1207 K.S MEANS

K	tapered bore, taper 1:12
S	oznaczenie konstrukcji wewnętrznej NTN

SPECIFICATIONS

Manufacturer	**NTN**
Manufacturer designation	**1207 K.S**
Rolling elements	**double-row ball bearing**