CASTOMER

**DATASHEET**

# Self-aligning ball bearing 1207-K-TV-C3 NKE

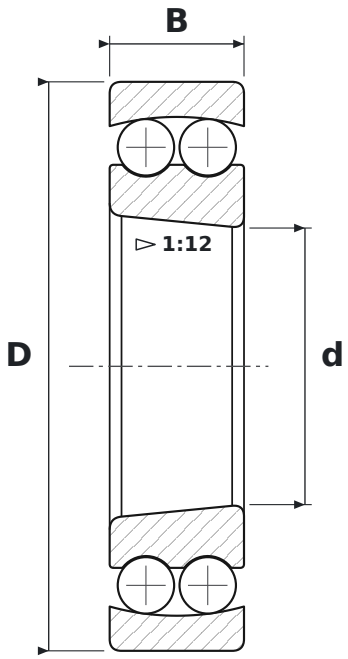


## DIMENSIONS

| | | |
|---|---|---|
| **d** | bore diameter | **35 mm** |
| **D** | outside diameter | **72 mm** |
| **B** | width | **17 mm** |

## WHAT 1207-K-TV-C3 MEANS

| | |
|---|---|
| **K** | tapered bore, taper 1:12 |
| **TV** | glass-fibre reinforced polyamide cage (FAG) |
| **C3** | radial clearance greater than normal |

## SPECIFICATIONS

| | |
|---|---|
| Manufacturer | **NKE** |
| Manufacturer designation | **1207-K-TV-C3** |
| Rolling elements | **double-row ball bearing** |