Self-aligning ball bearing 1207-TV-C3 FAG

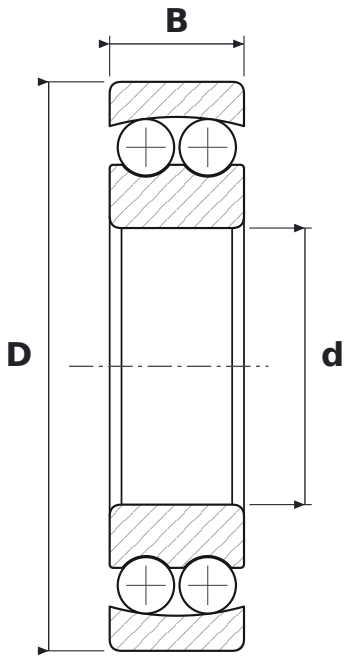

DIMENSIONS

d	bore diameter	**35 mm**
D	outside diameter	**72 mm**
B	width	**17 mm**

WHAT 1207-TV-C3 MEANS

TV	glass-fibre reinforced polyamide cage (FAG)
C3	radial clearance greater than normal

SPECIFICATIONS

Manufacturer	**FAG**
Manufacturer designation	**1207-TV-C3**
Rolling elements	**double-row ball bearing**