Self-aligning ball bearing 1208 C3 NACHI

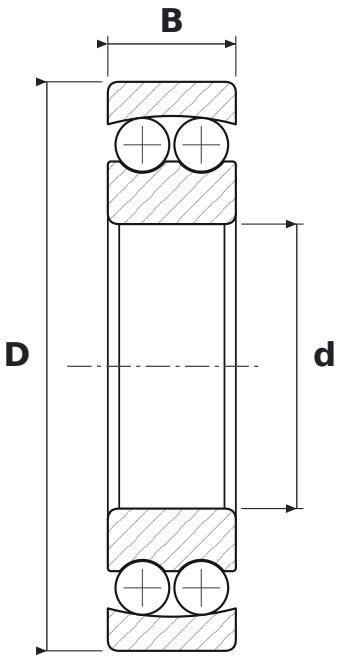

DIMENSIONS

d	bore diameter	**40 mm**
D	outside diameter	**80 mm**
B	width	**18 mm**

SPECIFICATIONS

Manufacturer	**NACHI**
Manufacturer designation	**1208 C3**
Rolling elements	**double-row ball bearing**
C3	**radial clearance greater than normal**
Seal	**open – no seals**