Self-aligning ball bearing 1208 K NSK

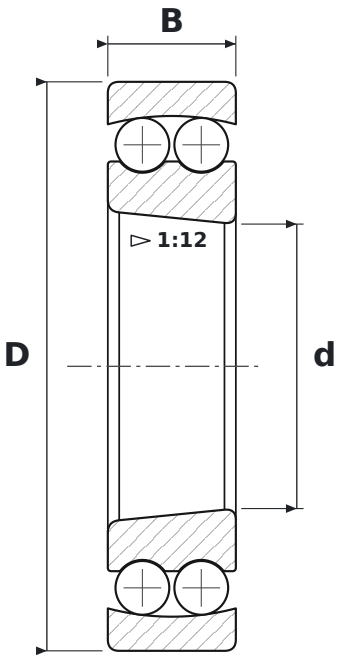

DIMENSIONS

d	bore diameter	**40 mm**
D	outside diameter	**80 mm**
B	width	**18 mm**

SPECIFICATIONS

Manufacturer	**NSK**
Manufacturer designation	**1208 K**
Rolling elements	**double-row ball bearing**
K	**tapered bore, taper 1:12**
Seal	**open – no seals**
Radial internal clearance	**CN – normal**