Self-aligning ball bearing 1208-K-TV NKE

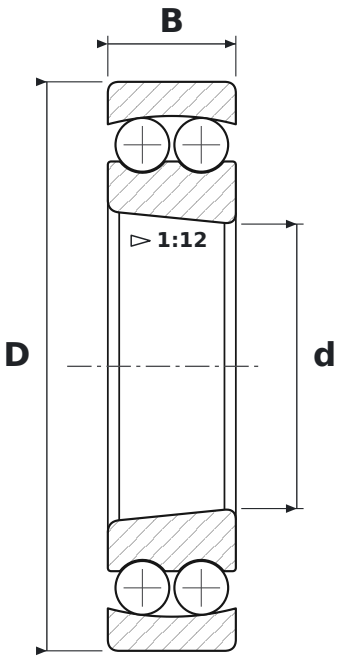

DIMENSIONS

d	bore diameter	**40 mm**
D	outside diameter	**80 mm**
B	width	**18 mm**

WHAT 1208-K-TV MEANS

K	tapered bore, taper 1:12
TV	glass-fibre reinforced polyamide cage (FAG)

SPECIFICATIONS

Manufacturer	**NKE**
Manufacturer designation	**1208-K-TV**
Rolling elements	**double-row ball bearing**