Self-aligning ball bearing 1208 KC3 NACHI

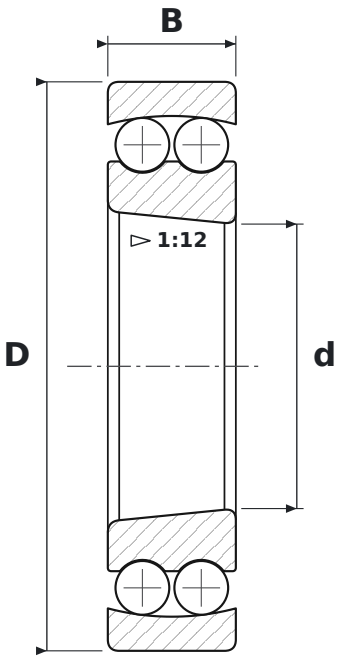

DIMENSIONS

d	bore diameter	**40 mm**
D	outside diameter	**80 mm**
B	width	**18 mm**

WHAT 1208 KC3 MEANS

K	tapered bore, taper 1:12
C3	radial clearance greater than normal

SPECIFICATIONS

Manufacturer	**NACHI**
Manufacturer designation	**1208 KC3**
Rolling elements	**double-row ball bearing**