CASTOMER

DATASHEET

Self-aligning ball bearing 1208 TVC3 NKE

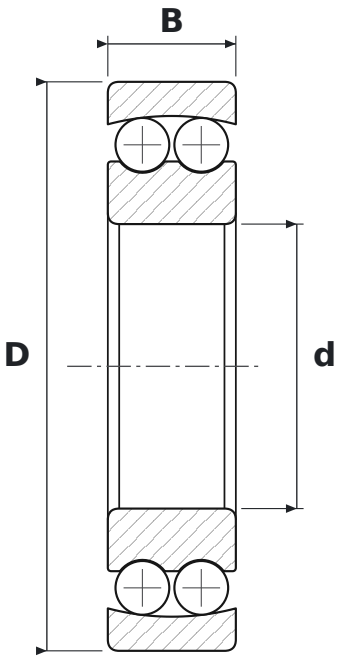

DIMENSIONS

d	bore diameter	**40 mm**
D	outside diameter	**80 mm**
B	width	**18 mm**

WHAT 1208 TVC3 MEANS

TV	glass-fibre reinforced polyamide cage (FAG)
C3	radial clearance greater than normal

SPECIFICATIONS

Manufacturer	**NKE**
Manufacturer designation	**1208 TVC3**
Rolling elements	**double-row ball bearing**