Self-aligning ball bearing 1209-K-TV-C3 FAG

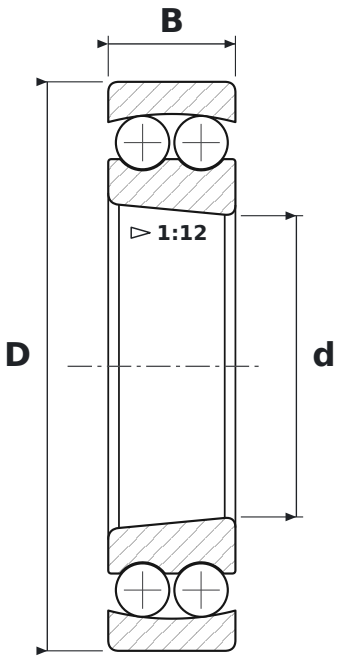

DIMENSIONS

d	bore diameter	**45 mm**
D	outside diameter	**85 mm**
B	width	**19 mm**

WHAT 1209-K-TV-C3 MEANS

K	tapered bore, taper 1:12
TV	glass-fibre reinforced polyamide cage (FAG)
C3	radial clearance greater than normal

SPECIFICATIONS

Manufacturer	**FAG**
Manufacturer designation	**1209-K-TV-C3**
Rolling elements	**double-row ball bearing**