Self-aligning ball bearing 1209 NSK

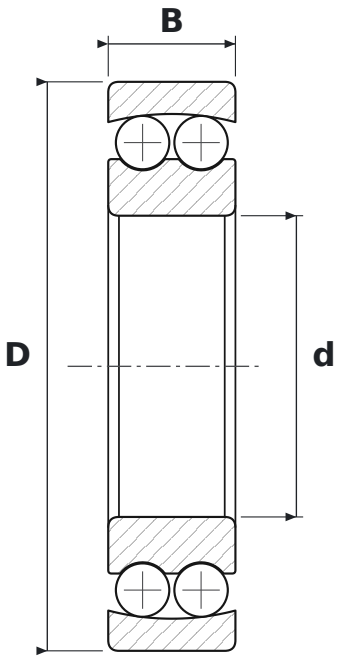

DIMENSIONS

d	bore diameter	**45 mm**
D	outside diameter	**85 mm**
B	width	**19 mm**

SPECIFICATIONS

Manufacturer	**NSK**
Manufacturer designation	**1209**
Rolling elements	**double-row ball bearing**
Seal	**open – no seals**
Radial internal clearance	**CN – normal**