CASTOMER

DATASHEET

Self-aligning ball bearing 1209 TVC3 NKE

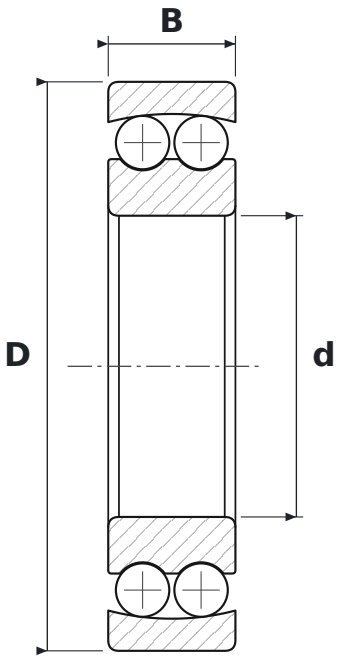

DIMENSIONS

d	bore diameter	**45 mm**
D	outside diameter	**85 mm**
B	width	**19 mm**

WHAT 1209 TVC3 MEANS

TV	glass-fibre reinforced polyamide cage (FAG)
C3	radial clearance greater than normal

SPECIFICATIONS

Manufacturer	**NKE**
Manufacturer designation	**1209 TVC3**
Rolling elements	**double-row ball bearing**