Self-aligning ball bearing 1211-C3 NKE

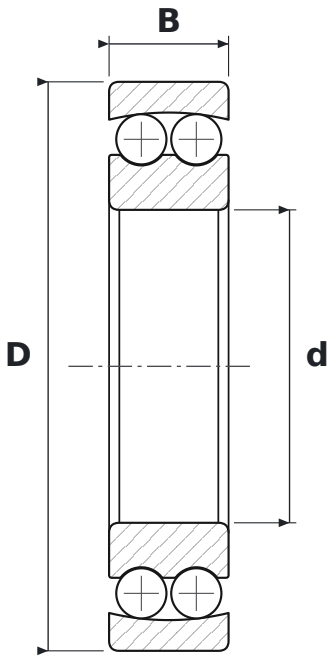

DIMENSIONS

d	bore diameter	**55 mm**
D	outside diameter	**100 mm**
B	width	**21 mm**

SPECIFICATIONS

Manufacturer	**NKE**
Manufacturer designation	**1211-C3**
Rolling elements	**double-row ball bearing**
C3	**radial clearance greater than normal**
Seal	**open – no seals**