Self-aligning ball bearing 1211 EKTN9/C3 SKF

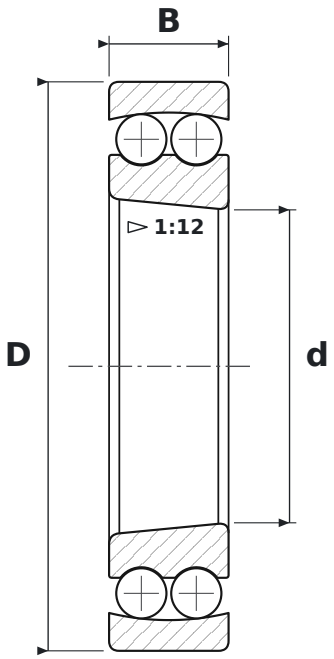

DIMENSIONS

d	bore diameter	**55 mm**
D	outside diameter	**100 mm**
B	width	**21 mm**

WHAT 1211 EKTN9/C3 MEANS

E	reinforced design, higher load rating
K	tapered bore, taper 1:12
TN9	glass-fibre reinforced PA66 cage (SKF)
C3	radial clearance greater than normal

SPECIFICATIONS

Manufacturer	**SKF**
Manufacturer designation	**1211 EKTN9/C3**
Rolling elements	**double-row ball bearing**