Self-aligning ball bearing 1211 KC3 KOYO

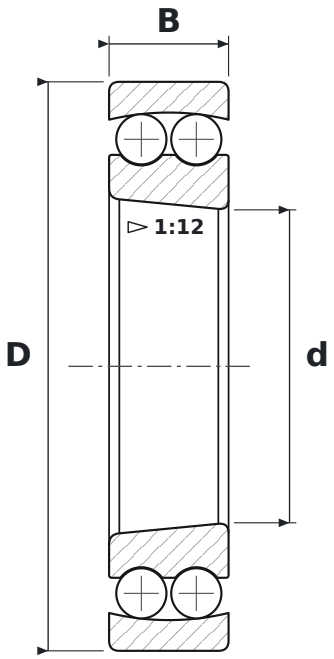

DIMENSIONS

d	bore diameter	**55 mm**
D	outside diameter	**100 mm**
B	width	**21 mm**

WHAT 1211 KC3 MEANS

K	tapered bore, taper 1:12
C3	radial clearance greater than normal

SPECIFICATIONS

Manufacturer	**KOYO**
Manufacturer designation	**1211 KC3**
Rolling elements	**double-row ball bearing**