# Self-aligning ball bearing 1211 TVC3 NKE

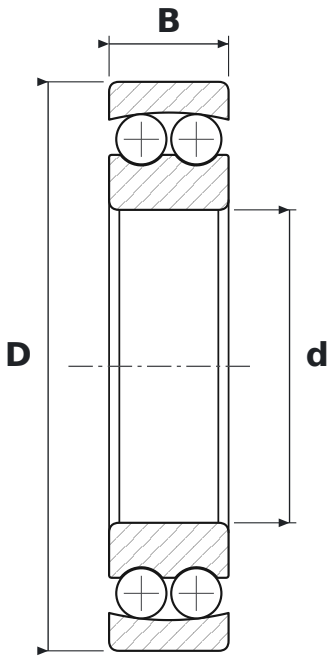


## DIMENSIONS

| | | |
|---|---|---|
| **d** | bore diameter | **55 mm** |
| **D** | outside diameter | **100 mm** |
| **B** | width | **21 mm** |

## WHAT 1211 TVC3 MEANS

| | |
|---|---|
| **TV** | glass-fibre reinforced polyamide cage (FAG) |
| **C3** | radial clearance greater than normal |

## SPECIFICATIONS

| | |
|---|---|
| Manufacturer | **NKE** |
| Manufacturer designation | **1211 TVC3** |
| Rolling elements | **double-row ball bearing** |