Self-aligning ball bearing 1212 C3 KOYO

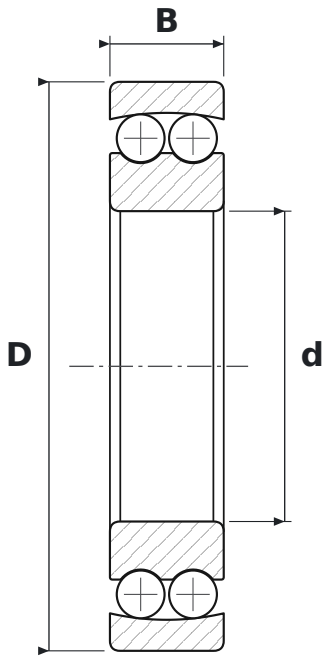

DIMENSIONS

d	bore diameter	**60 mm**
D	outside diameter	**110 mm**
B	width	**22 mm**

SPECIFICATIONS

Manufacturer	**KOYO**
Manufacturer designation	**1212 C3**
Rolling elements	**double-row ball bearing**
C3	**radial clearance greater than normal**
Seal	**open – no seals**