Self-aligning ball bearing 1212 ETN9C3 SKF

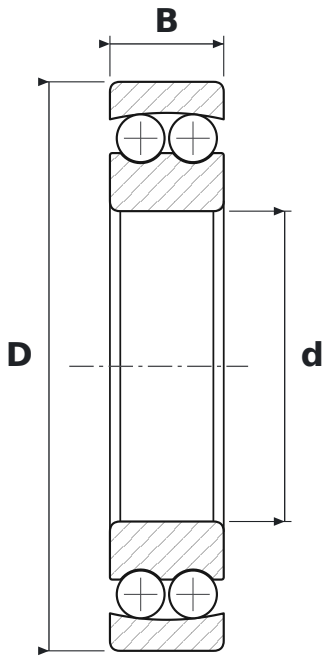

DIMENSIONS

d	bore diameter	**60 mm**
D	outside diameter	**110 mm**
B	width	**22 mm**

WHAT 1212 ETN9C3 MEANS

E	reinforced design, higher load rating
TN9	glass-fibre reinforced PA66 cage (SKF)
C3	radial clearance greater than normal

SPECIFICATIONS

Manufacturer	**SKF**
Manufacturer designation	**1212 ETN9C3**
Rolling elements	**double-row ball bearing**