Self-aligning ball bearing 1212 SK NTN

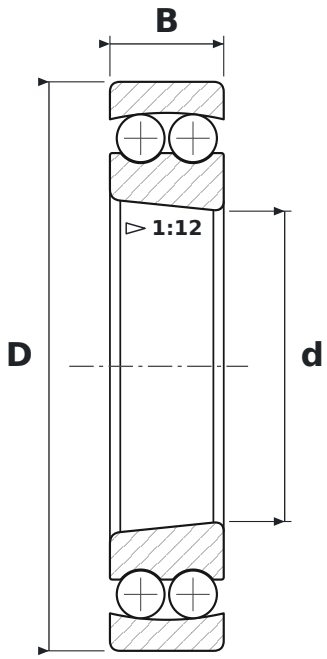

DIMENSIONS

d	bore diameter	**60 mm**
D	outside diameter	**110 mm**
B	width	**22 mm**

WHAT 1212 SK MEANS

S	oznaczenie konstrukcji wewnętrznej NTN
K	tapered bore, taper 1:12

SPECIFICATIONS

Manufacturer	**NTN**
Manufacturer designation	**1212 SK**
Rolling elements	**double-row ball bearing**