Self-aligning ball bearing 1212-C3-TN ZEN

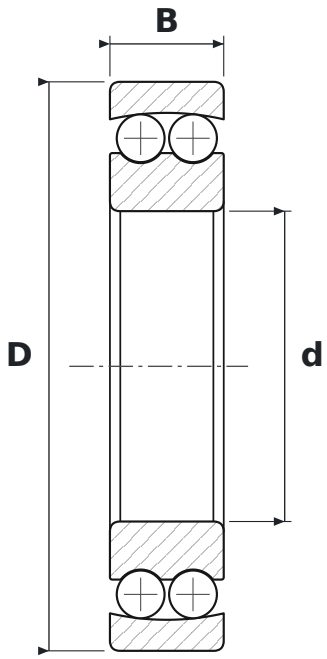

DIMENSIONS

d	bore diameter	**60 mm**
D	outside diameter	**110 mm**
B	width	**22 mm**

WHAT 1212-C3-TN MEANS

C3	radial clearance greater than normal
TN	polyamide cage

SPECIFICATIONS

Manufacturer	**ZEN**
Manufacturer designation	**1212-C3-TN**
Rolling elements	**double-row ball bearing**