Deep groove ball bearing 16001-2Z NKE

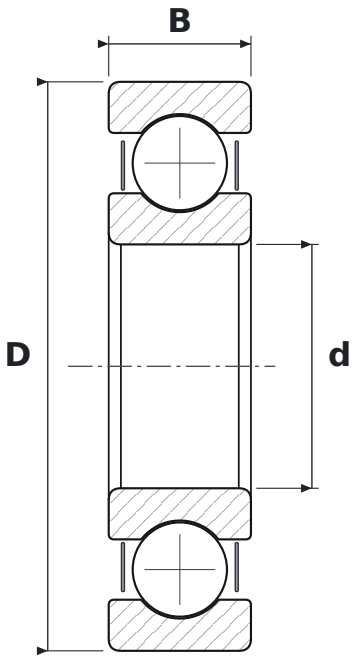

DIMENSIONS

d	bore diameter	**12 mm**
D	outside diameter	**28 mm**
B	width	**7 mm**

WHAT 16001-2Z MEANS

160	łożysko kulkowe zwykłe, seria 160 – węższa odmiana serii 60 (te same d i D)
2Z	steel shields, both sides

SPECIFICATIONS

Manufacturer	**NKE**
Manufacturer designation	**16001-2Z**
Rolling elements	**single-row ball bearing**
Mass	**0.019 kg**