Deep groove ball bearing 16002-2Z-A-C3 FAG

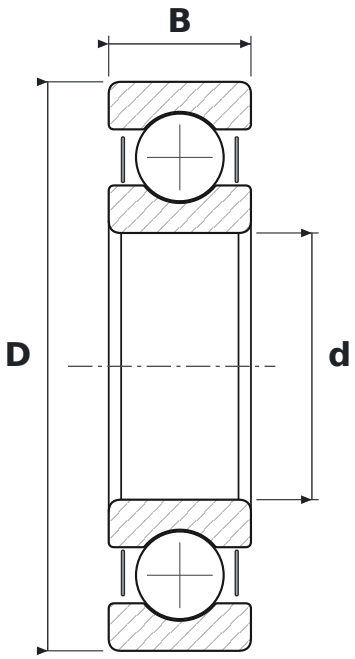

DIMENSIONS

d	bore diameter	**15 mm**
D	outside diameter	**32 mm**
B	width	**8 mm**

WHAT 16002-2Z-A-C3 MEANS

160	łożysko kulkowe zwykłe, seria 160 – węższa odmiana serii 60 (te same d i D)
2Z	steel shields, both sides
C3	radial clearance greater than normal

SPECIFICATIONS

Manufacturer	**FAG**
Manufacturer designation	**16002-2Z-A-C3**
Rolling elements	**single-row ball bearing**