CASTOMER

DATASHEET

Deep groove ball bearing 16002-ZZ TIMKEN

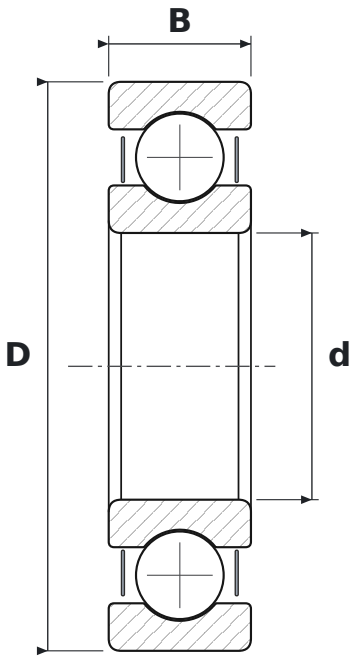

DIMENSIONS

d	bore diameter	**15 mm**
D	outside diameter	**32 mm**
B	width	**8 mm**

WHAT 16002-ZZ MEANS

160	łożysko kulkowe zwykłe, seria 160 – węższa odmiana serii 60 (te same d i D)
ZZ	blaszki ochronne, dwustronne

SPECIFICATIONS

Manufacturer	**TIMKEN**
Manufacturer designation	**16002-ZZ**
Rolling elements	**single-row ball bearing**