Deep groove ball bearing 16003 TIMKEN

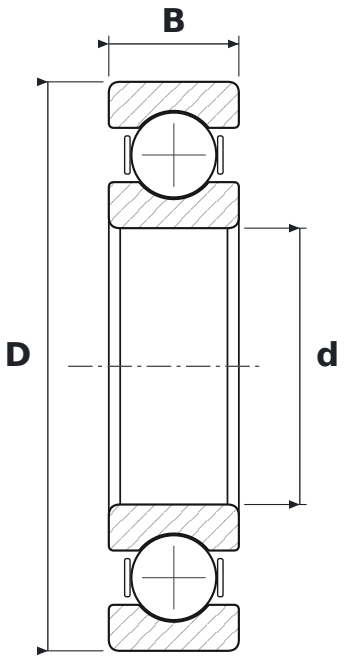

DIMENSIONS

d	bore diameter	**17 mm**
D	outside diameter	**35 mm**
B	width	**8 mm**

SPECIFICATIONS

Manufacturer	**TIMKEN**
Manufacturer designation	**16003**
Rolling elements	**single-row ball bearing**
Seal	**open – no seals**
Radial internal clearance	**CN – normal**