Deep groove ball bearing 16004 C3 KOYO

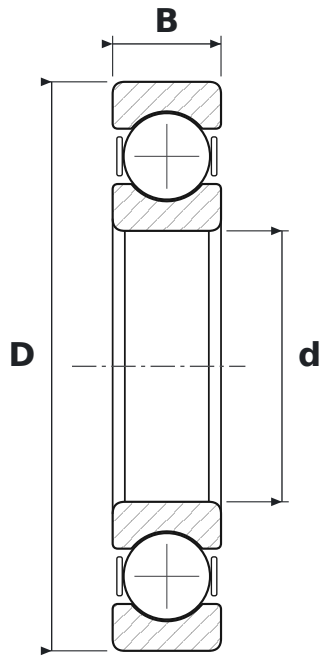

DIMENSIONS

d	bore diameter	**20 mm**
D	outside diameter	**42 mm**
B	width	**8 mm**

WHAT 16004 C3 MEANS

160	łożysko kulkowe zwykłe, seria 160 – węższa odmiana serii 60 (te same d i D)
C3	radial clearance greater than normal

SPECIFICATIONS

Manufacturer	**KOYO**
Manufacturer designation	**16004 C3**
Rolling elements	**single-row ball bearing**