Deep groove ball bearing 16004-Z FAG

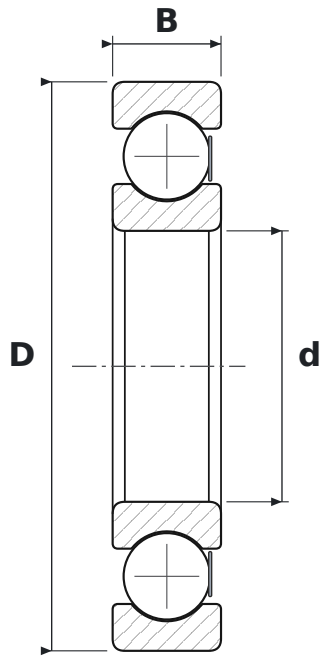

DIMENSIONS

d	bore diameter	**20 mm**
D	outside diameter	**42 mm**
B	width	**8 mm**

WHAT 16004-Z MEANS

160	łożysko kulkowe zwykłe, seria 160 – węższa odmiana serii 60 (te same d i D)
Z	steel shield, one side

SPECIFICATIONS

Manufacturer	**FAG**
Manufacturer designation	**16004-Z**
Rolling elements	**single-row ball bearing**
Mass	**0.05 kg**