Deep groove ball bearing 16006-2Z FAG

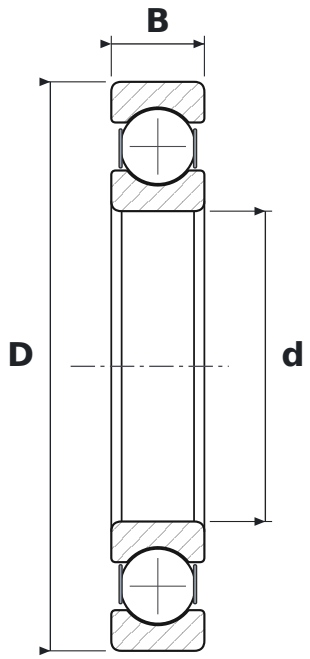

DIMENSIONS

d	bore diameter	**30 mm**
D	outside diameter	**55 mm**
B	width	**9 mm**

WHAT 16006-2Z MEANS

160	łożysko kulkowe zwykłe, seria 160 – węższa odmiana serii 60 (te same d i D)
2Z	steel shields, both sides

SPECIFICATIONS

Manufacturer	**FAG**
Manufacturer designation	**16006-2Z**
Rolling elements	**single-row ball bearing**
Mass	**0.09 kg**