Deep groove ball bearing 1603-2Z ZEN

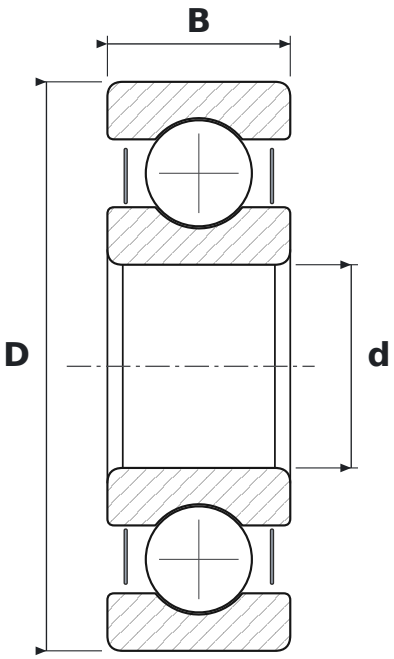

DIMENSIONS

d	bore diameter	**7.94 mm**
D	outside diameter	**22.23 mm**
B	width	**7.14 mm**

SPECIFICATIONS

Manufacturer	**ZEN**
Manufacturer designation	**1603-2Z**
Rolling elements	**single-row ball bearing**
2Z	**steel shields, both sides**
Radial internal clearance	**CN – normal**
Mass	**0.012 kg**