CASTOMER

DATASHEET

Deep groove ball bearing 16101 JRX NTN

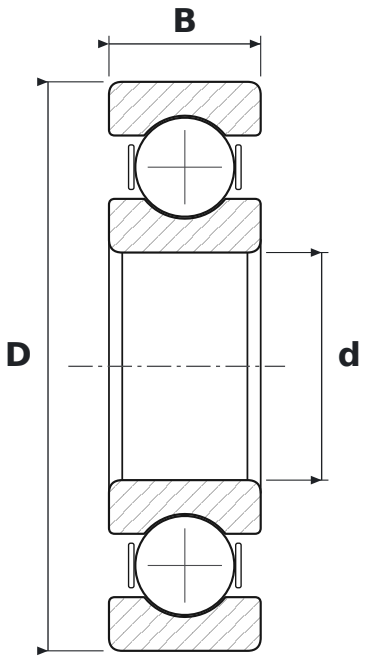

DIMENSIONS

d	bore diameter	**12 mm**
D	outside diameter	**30 mm**
B	width	**8 mm**

SPECIFICATIONS

Manufacturer	**NTN**
Manufacturer designation	**16101 JRX**
Rolling elements	**single-row ball bearing**
JR	**riveted pressed steel cage (FAG)**
Seal	**open – no seals**
Radial internal clearance	**CN – normal**
Mass	**0.027 kg**