Deep groove ball bearing 16101-ZZ SKF

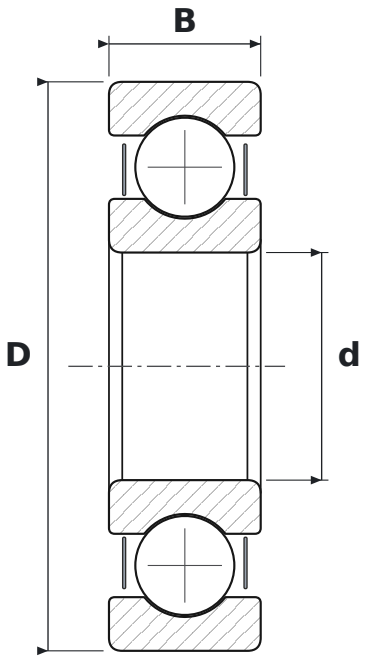

DIMENSIONS

d	bore diameter	**12 mm**
D	outside diameter	**30 mm**
B	width	**8 mm**

SPECIFICATIONS

Manufacturer	**SKF**
Manufacturer designation	**16101-ZZ**
Rolling elements	**single-row ball bearing**
2Z	**steel shields, both sides**
Radial internal clearance	**CN – normal**