# Deep groove ball bearing 16101-ZZ TIMKEN

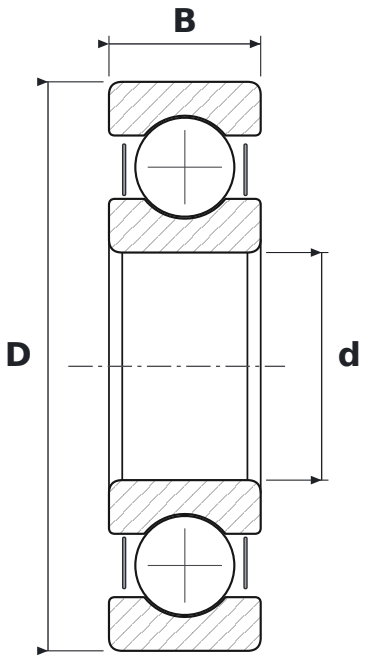


## DIMENSIONS

| | | |
|---|---|---|
| **d** | bore diameter | **12 mm** |
| **D** | outside diameter | **30 mm** |
| **B** | width | **8 mm** |

## SPECIFICATIONS

| | |
|---|---|
| Manufacturer | **TIMKEN** |
| Manufacturer designation | **16101-ZZ** |
| Rolling elements | **single-row ball bearing** |
| 2Z | **steel shields, both sides** |
| Radial internal clearance | **CN – normal** |