Self-aligning ball bearing 2204 2RS KOYO

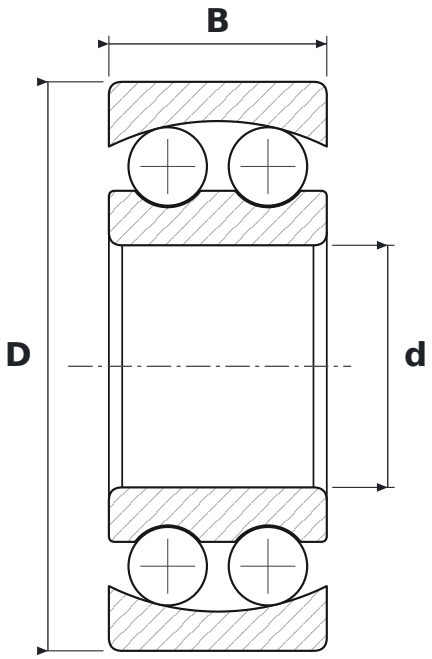

DIMENSIONS

d	bore diameter	**20 mm**
D	outside diameter	**47 mm**
B	width	**18 mm**

SPECIFICATIONS

Manufacturer	**KOYO**
Manufacturer designation	**2204 2RS**
Rolling elements	**double-row ball bearing**
2RS	**uszczelnienia stykowe, dwustronne**
Radial internal clearance	**CN – normal**