Self-aligning ball bearing 2204 EKTNGC3 NSK

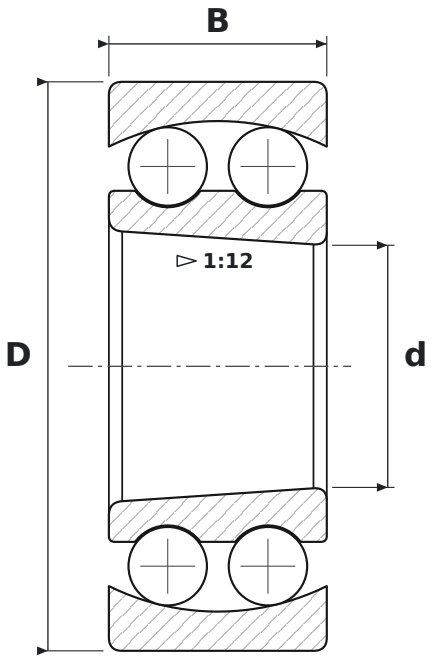

DIMENSIONS

d	bore diameter	**20 mm**
D	outside diameter	**47 mm**
B	width	**18 mm**

WHAT 2204 EKTNGC3 MEANS

E	reinforced design, higher load rating
K	tapered bore, taper 1:12
TNG	koszyk zatrzaskowy z poliamidu PA66 wzmocnionego włóknem szklanym
C3	radial clearance greater than normal

SPECIFICATIONS

Manufacturer	**NSK**
Manufacturer designation	**2204 EKTNGC3**
Rolling elements	**double-row ball bearing**