Self-aligning ball bearing 2212 KC3 NACHI

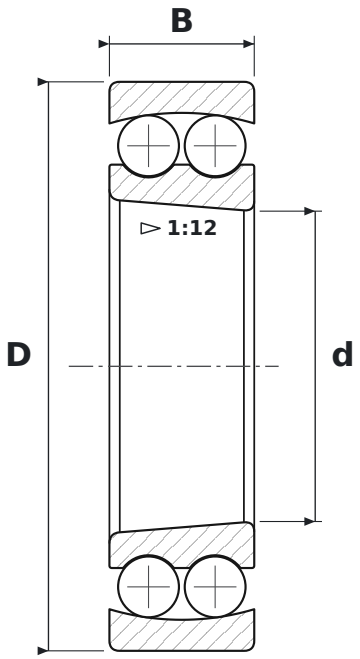

DIMENSIONS

d	bore diameter	**60 mm**
D	outside diameter	**110 mm**
B	width	**28 mm**

WHAT 2212 KC3 MEANS

K	tapered bore, taper 1:12
C3	radial clearance greater than normal

SPECIFICATIONS

Manufacturer	**NACHI**
Manufacturer designation	**2212 KC3**
Rolling elements	**double-row ball bearing**