Self-aligning ball bearing 2212 NKE

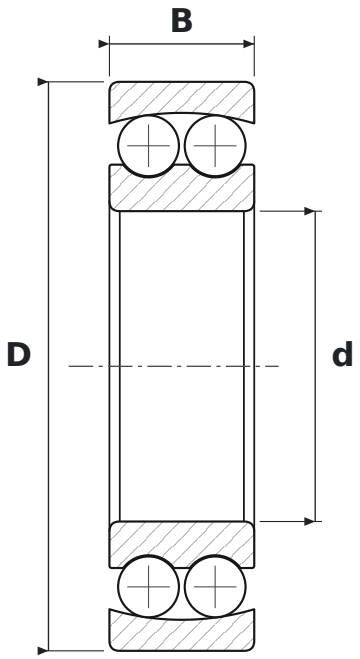

DIMENSIONS

d	bore diameter	**60 mm**
D	outside diameter	**110 mm**
B	width	**28 mm**

SPECIFICATIONS

Manufacturer	**NKE**
Manufacturer designation	**2212**
Rolling elements	**double-row ball bearing**
Seal	**open – no seals**
Radial internal clearance	**CN – normal**