Self-aligning ball bearing 2212-TV FAG

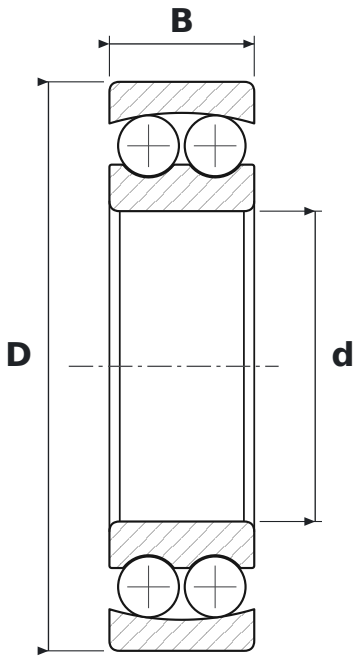

DIMENSIONS

d	bore diameter	**60 mm**
D	outside diameter	**110 mm**
B	width	**28 mm**

SPECIFICATIONS

Manufacturer	**FAG**
Manufacturer designation	**2212-TV**
Rolling elements	**double-row ball bearing**
TV	**glass-fibre reinforced polyamide cage (FAG)**
Seal	**open – no seals**
Radial internal clearance	**CN – normal**