Deep groove ball bearing 3003-2Z INA

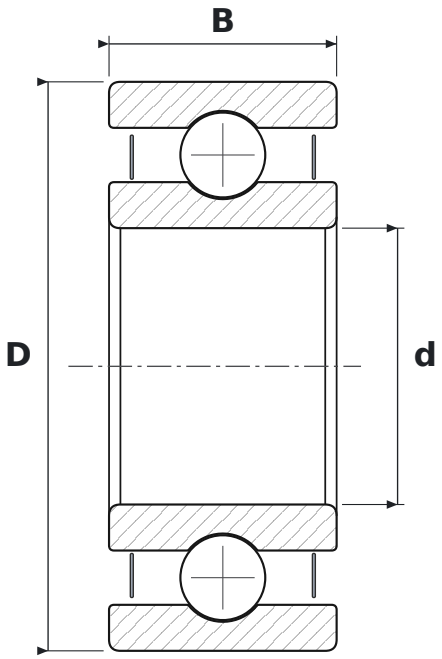

DIMENSIONS

d	bore diameter	**17 mm**
D	outside diameter	**35 mm**
B	width	**14 mm**

SPECIFICATIONS

Manufacturer	**INA**
Manufacturer designation	**3003-2Z**
Rolling elements	**single-row ball bearing**
2Z	**steel shields, both sides**
Radial internal clearance	**CN – normal**