Deep groove ball bearing 3006-2RS INA

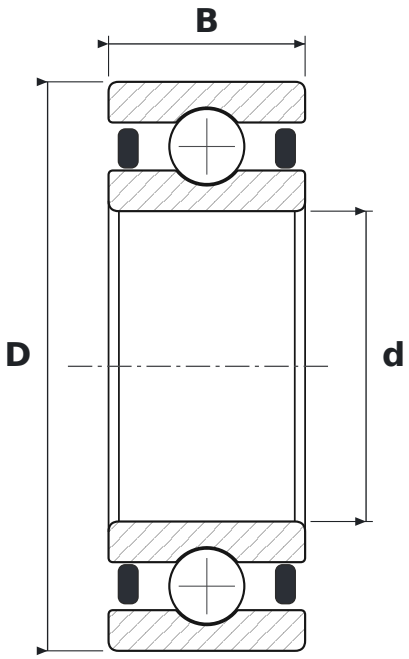

DIMENSIONS

d	bore diameter	**30 mm**
D	outside diameter	**55 mm**
B	width	**19 mm**

SPECIFICATIONS

Manufacturer	**INA**
Manufacturer designation	**3006-2RS**
Rolling elements	**single-row ball bearing**
2RS	**contact rubber seals, both sides**
Radial internal clearance	**CN – normal**