Deep groove ball bearing 310 NR SKF

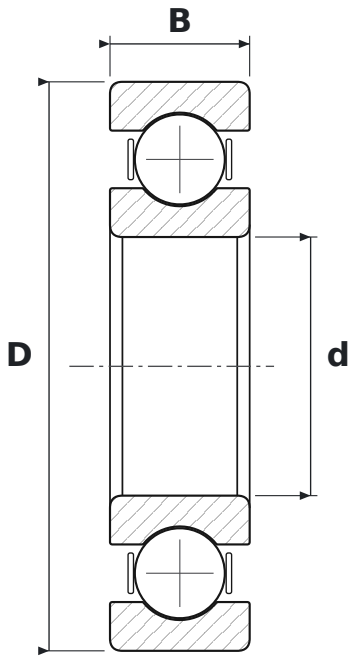

DIMENSIONS

d	bore diameter	**50 mm**
D	outside diameter	**110 mm**
B	width	**27 mm**

SPECIFICATIONS

Manufacturer	**SKF**
Manufacturer designation	**310 NR**
Rolling elements	**single-row ball bearing**
NR	**snap ring groove with snap ring**
Seal	**open – no seals**
Radial internal clearance	**CN – normal**
Mass	**1.167 kg**