CASTOMER

DATASHEET

Deep groove ball bearing 312-ZNR SKF

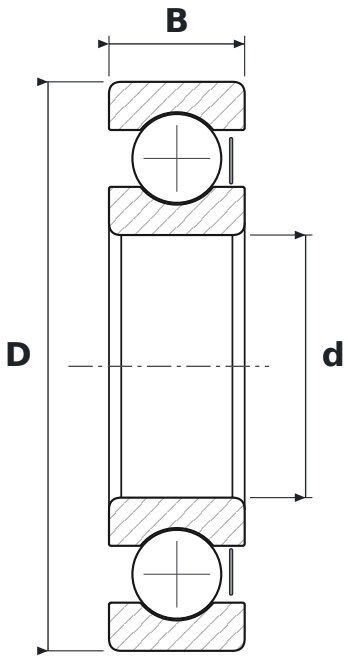

DIMENSIONS

d	bore diameter	**60 mm**
D	outside diameter	**130 mm**
B	width	**31 mm**

WHAT 312-ZNR MEANS

Z	steel shield, one side
NR	snap ring groove with snap ring

SPECIFICATIONS

Manufacturer	**SKF**
Manufacturer designation	**312-ZNR**
Rolling elements	**single-row ball bearing**
Mass	**1.89 kg**