Deep groove ball bearing 312-2Z SKF

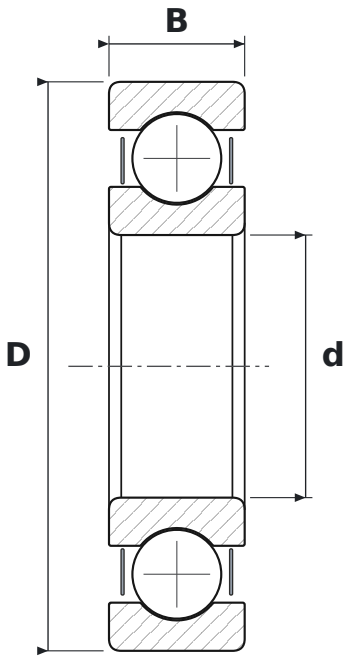

DIMENSIONS

d	bore diameter	**60 mm**
D	outside diameter	**130 mm**
B	width	**31 mm**

SPECIFICATIONS

Manufacturer	**SKF**
Manufacturer designation	**312-2Z**
Rolling elements	**single-row ball bearing**
2Z	**steel shields, both sides**
Radial internal clearance	**CN – normal**
Mass	**1.89 kg**