Deep groove ball bearing 313 NR SKF

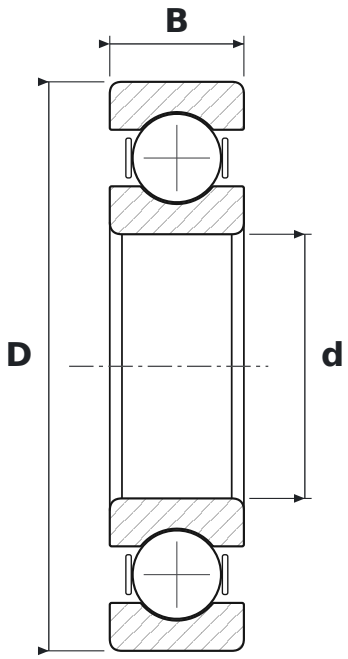

DIMENSIONS

d	bore diameter	**65 mm**
D	outside diameter	**140 mm**
B	width	**33 mm**

SPECIFICATIONS

Manufacturer	**SKF**
Manufacturer designation	**313 NR**
Rolling elements	**single-row ball bearing**
NR	**snap ring groove with snap ring**
Seal	**open – no seals**
Radial internal clearance	**CN – normal**
Mass	**2.343 kg**