Deep groove ball bearing 313-2Z SKF

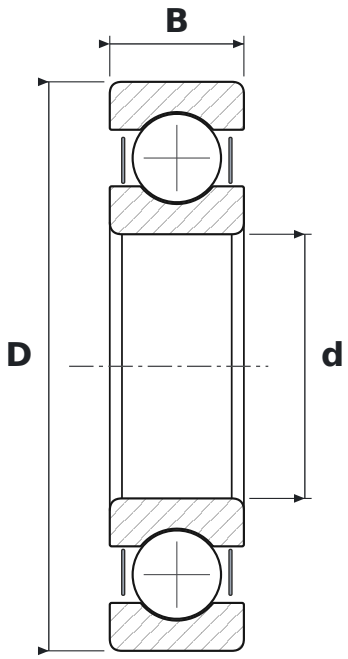

DIMENSIONS

d	bore diameter	**65 mm**
D	outside diameter	**140 mm**
B	width	**33 mm**

SPECIFICATIONS

Manufacturer	**SKF**
Manufacturer designation	**313-2Z**
Rolling elements	**single-row ball bearing**
2Z	**steel shields, both sides**
Radial internal clearance	**CN – normal**
Mass	**2.27 kg**