Deep groove ball bearing 314-ZNR SKF

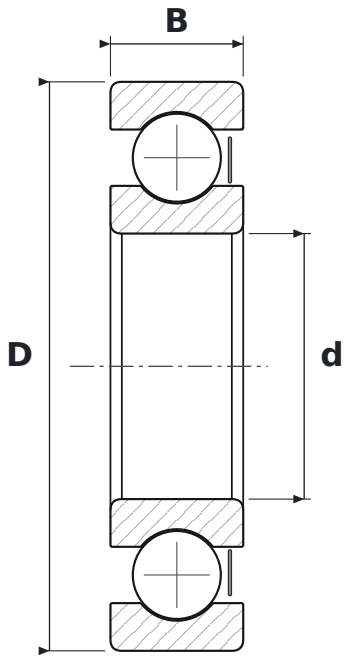

DIMENSIONS

d	bore diameter	**70 mm**
D	outside diameter	**150 mm**
B	width	**35 mm**

WHAT 314-ZNR MEANS

Z	steel shield, one side
NR	snap ring groove with snap ring

SPECIFICATIONS

Manufacturer	**SKF**
Manufacturer designation	**314-ZNR**
Rolling elements	**single-row ball bearing**