CASTOMER

DATASHEET

Angular contact ball bearing 3207 B-2RSTVC3 NKE

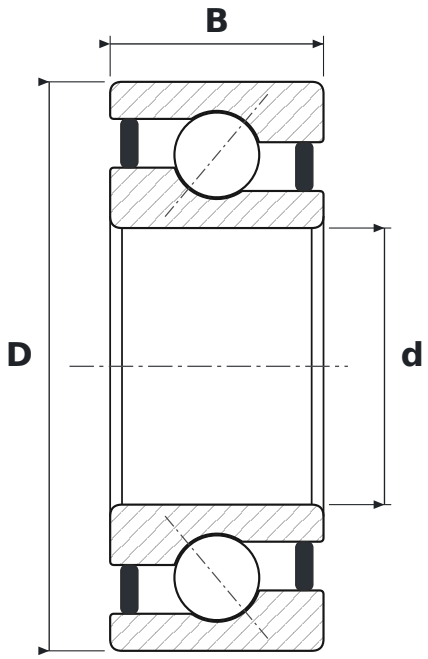

DIMENSIONS

d	bore diameter	**35 mm**
D	outside diameter	**72 mm**
B	width	**27 mm**

WHAT 3207 B-2RSTVC3 MEANS

B	40° contact angle
2RS	contact rubber seals, both sides
TV	glass-fibre reinforced polyamide cage (FAG)
C3	radial clearance greater than normal

SPECIFICATIONS

Manufacturer	**NKE**
Manufacturer designation	**3207 B-2RSTVC3**
Rolling elements	**double-row ball bearing**