# Angular contact ball bearing 3207 BD2HRSTC3 FAG

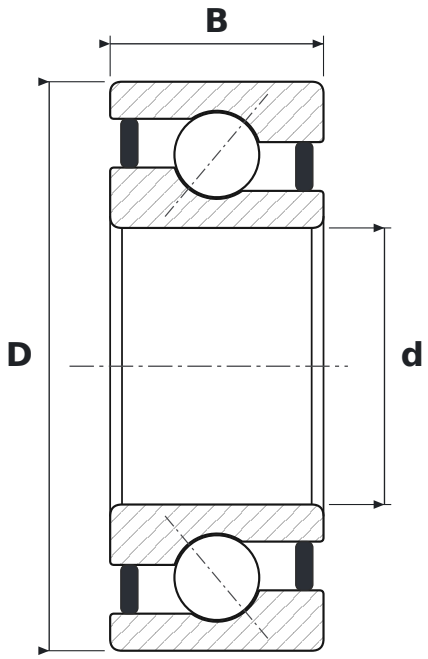


## DIMENSIONS

| | | |
|---|---|---|
| **d** | bore diameter | **35 mm** |
| **D** | outside diameter | **72 mm** |
| **B** | width | **27 mm** |

## SPECIFICATIONS

| | |
|---|---|
| Manufacturer | **FAG** |
| Manufacturer designation | **3207 BD2HRSTC3** |
| Rolling elements | **double-row ball bearing** |
| B | **40° contact angle** |
| 2RS | **contact rubber seals, both sides** |
| C3 | **radial clearance greater than normal** |
| Mass | **0.448 kg** |