# Angular contact ball bearing 3209 B2RS ZEN

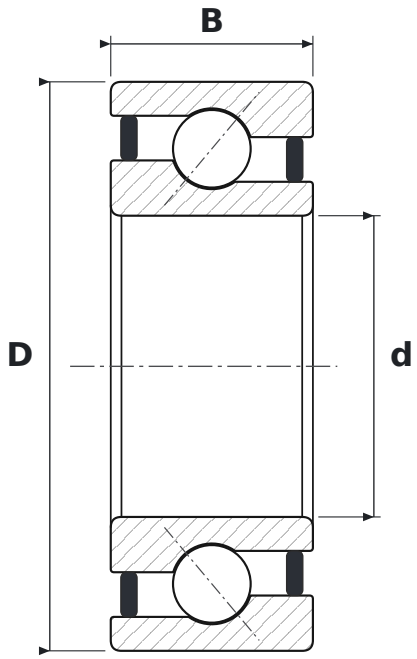


## DIMENSIONS

| | | |
|---|---|---|
| **d** | bore diameter | **45 mm** |
| **D** | outside diameter | **85 mm** |
| **B** | width | **30.2 mm** |

## WHAT 3209 B2RS MEANS

| | |
|---|---|
| **B** | 40° contact angle |
| **2RS** | uszczelnienia stykowe z gumy syntetycznej, dwustronne (od −20 do +110 °C) |

## SPECIFICATIONS

| | |
|---|---|
| Manufacturer | **ZEN** |
| Manufacturer designation | **3209 B2RS** |
| Rolling elements | **double-row ball bearing** |