CASTOMER

DATASHEET

Angular contact ball bearing 3210 A2RSTNC3MT3 SKF

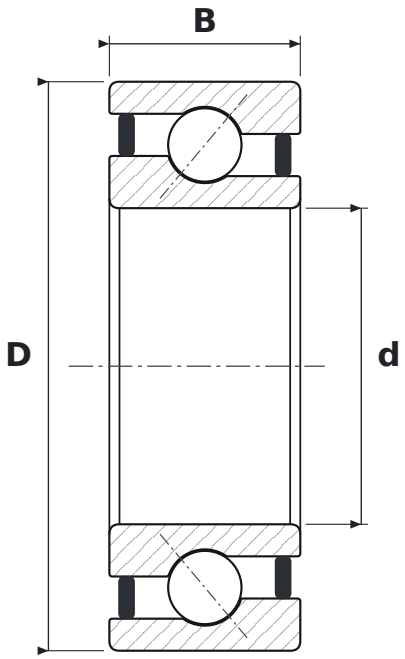

DIMENSIONS

d	bore diameter	**50 mm**
D	outside diameter	**90 mm**
B	width	**30.2 mm**

SPECIFICATIONS

Manufacturer	**SKF**
Manufacturer designation	**3210 A2RSTNC3MT3**
Rolling elements	**double-row ball bearing**
2RS	**contact rubber seals, both sides**
TN	**koszyk z poliamidu PA66**
C3	**luz osiowy większy od normalnego**
M	**machined brass cage**
Mass	**0.673 kg**