Angular contact ball bearing 3210 BD2HRSTC3 FAG

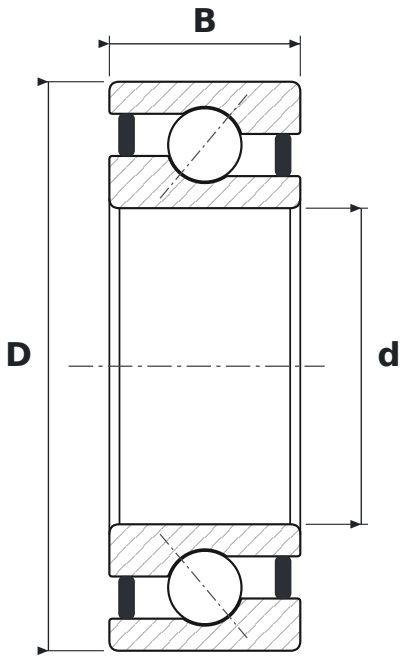

DIMENSIONS

d	bore diameter	**50 mm**
D	outside diameter	**90 mm**
B	width	**30.2 mm**

SPECIFICATIONS

Manufacturer	**FAG**
Manufacturer designation	**3210 BD2HRSTC3**
Rolling elements	**double-row ball bearing**
B	**40° contact angle**
2RS	**contact rubber seals, both sides**
C3	**radial clearance greater than normal**
Mass	**0.668 kg**