Angular contact ball bearing 3211 BTNGC3 NSK

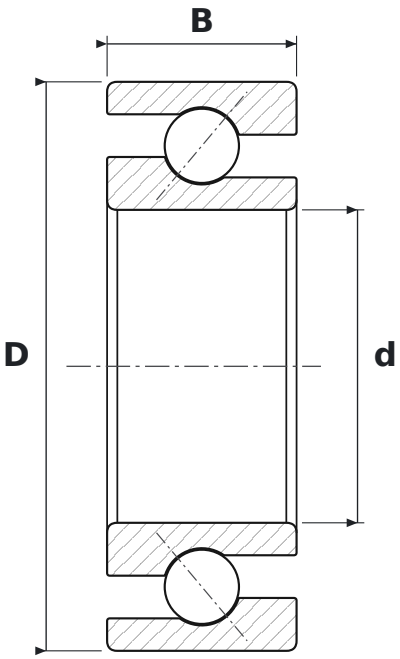

DIMENSIONS

d	bore diameter	**55 mm**
D	outside diameter	**100 mm**
B	width	**33.3 mm**

WHAT 3211 BTNGC3 MEANS

B	40° contact angle
TNG	koszyk zatrzaskowy z poliamidu PA66 wzmocnionego włóknem szklanym
C3	radial clearance greater than normal

SPECIFICATIONS

Manufacturer	**NSK**
Manufacturer designation	**3211 BTNGC3**
Rolling elements	**double-row ball bearing**